Kinematic analysis and stability optimisation of a reconfigurable legged-wheeled mini-rover

Christophe Grand[a], Faïz Ben Amar[a], Philippe Bidaud[a*]

[a]Laboratoire de Robotique de Paris, Université de Paris VI,
10-12, avenue de l'Europe, 78140 Vélizy, Paris, France

ABSTRACT

This paper deals with the optimisation of locomotion performances of vehicle used for planetary exploration. The design of an innovative reconfigurable mini-rover is presented. Then, a control process that optimize the stability and the global traction performances is developed. A method to identify in-situ the wheel-ground mechanical contact properties is proposed and used to determine an optimal traction torque. Results on experiments and simulations show that the rover stability is significantly enhanced by using the proposed control method.

Keywords: hybrid locomotion, reconfiguration, force balance, stability, wheel-ground interaction.

1. INTRODUCTION

Future planetary exploration missions will require mobile robots which are able to carry out high-performance locomotion tasks while insuring system integrity. The locomotion of such rovers on uneven surfaces involves complex wheel-ground interactions which are related to the geometrical and physical soil properties: map roughness, rocks distribution, soil compaction, friction characteristics, etc... So, enhancement of locomotion performances in such environment needs to design innovative rovers and to search for original control schemes, by taking these interactions into account.

Outdoor mobile robots design can be roughly split in two main ways of research: wheeled machines and legged machines. Main activities concerning the first categorie of vehicles are the design of active suspension[1], whereas control aspects are the main problems for the second. There exist now an interest for a new type of vehicle which inherits both advantages of legged and wheeled vehicles, namely the high adaptive capabilities of first and the high velocity and payload of the second ones[2]. These systems are able to perform hybrid locomotion like peristalsic mode and offer terrain adaptation capabilities based on the system reconfigurability[3].

This paper presents the design of a reconfigurable mini-rover[4] and an original algorithm which perform an optimisation control of both the rover static-stability and the global traction. The first section consists in a short description of the rover design. The second one interests platform attitude control algorithms that enhance the rover stability and forces balance. Then, the physical properties of wheel-ground interactions are investigated in the aim to determine the optimal wheel traction torque. These methods are validated through experiments and simulations which are performed on a dynamic simulation tool that integrates complex interactions between rover and soft soil.

2. THE MINI-ROVER DESIGN

The mini-rover prototype shown in figure 1, is approximately 40 cm long and weights 10 kg. It is a high mobility redundantly actuated vehicle. It has four legs each combining a 2 DOF suspension mechanism with a steering and driven wheel. The leg, shown in figure 2b, is driven by two electrical linear actuators. This mechanism can be seen as a large displacement active suspension.

The mini-rover is equipped with: two inclinometers to get information on platform orientation and a 3 components force sensor on each leg to measure contact forces. Four control-boards based on a 80c592 micro-controller are dedicated to the low-level control of each leg (four DOF controlled by each one). A PC-104 is used for the

* correspondance: {grand, amar, bidaud}@robot.uvsq.fr

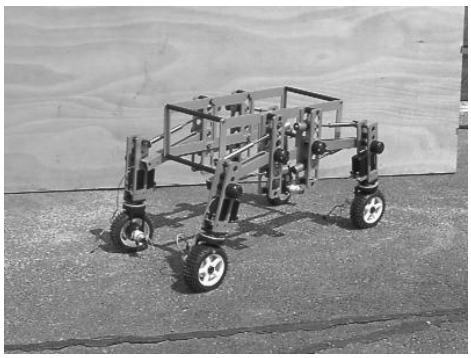

Figure 1: The mini-rover structure

high-level control such as attitude control, load and traction force balance, generation of different locomotion mode (rolling mode, peristaltic mode, ...). Communications between the PC and micro-controllers are achieved by a CAN bus.

This mini-rover was developed to provide an experimental platform in the aim to study the optimisation of rover locomotion performances on granular medias such sandy soils. The actuated mobilities provide the system the ability: to permanently maintain the four wheels on the ground during displacements on uneven surfaces, to increase ground clearance, to increase the stability and the traction by controlling force balancing through the reconfiguration of the mini-rover. Moreover, this kinematics allows the use of secondary locomotion modes namely peristaltic mode (crawling motion)[5], and high obstacle clearing mode based on a coordinated wheel-leg motion.

One of the central objectives in the development of such technology is to investigate self-adaptation in the locomotion mode relatively to the terrain characteristics from observation of the internal state of the vehicle, the wheel-ground interactions and the local environment.

3. ROVER STABILITY CONTROL

In this section, we will first describe briefly the rover kinematics. Secondly, we will develop the criteria which optimise both the traction forces distribution and the rover stability. Then, we will propose a kinematic based solution of the optimal configuration that leads to the rover stability. An original velocity model based control of the rover platform attitude is also described, and is evaluated through a dynamic simulation which integrates interactions between wheels and soft soil. The evaluation of the rover stability margin during simulation is based on a geometric metric proposed by Papadopoulos[6].

The rover configuration is described by a set of parameters (α_i , β_i) defined in figure 2. The orientation of the platform frame $\mathcal{R}_1$ is given by three angles with respect to the fixe frame $\mathcal{R}_0$, which are the conventional roll-pitch-yaw angles (ϕ,ψ,θ). The rover center-of-gravity (c.o.g) is denoted G and will be considered as fixed in platform frame. This approximation can be made by considering that the leg mass is small compared to the mass of batteries and other electronic equipments.

3.1. Combined criteria for traction and stability optimisation

When the system is moving, the tangential plane at wheel-ground contact is difficult to determine from the force sensor measurements. Thus, we will assume that contact planes stay horizontal, i.e., the ground is represented instantaneously by four discrete horizontal planes with different altitudes. Furthermore, each leg is supposed to be in contact with the ground. This assumption is justified by the use of an independent force feedback control on each one.

As the optimisation of the vertical contact-forces balance involves the enhancement of vehicle static-stability, the considered criterion is based on force distribution. It is well known that vertical contact-forces balance can

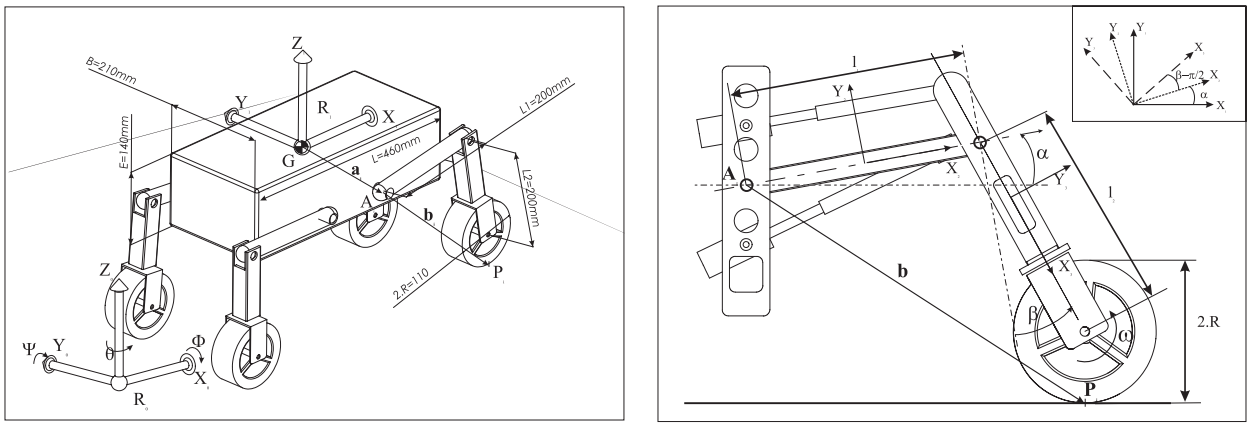

(a) (b)

Figure 2: (a) General kinematics of the mini-rover, (b) detailed kinematics of a wheeled suspension.

be reached by minimizing the projected distance on horizontal plane between the rover c.o.g and the geometric center of wheel-ground contacts. Moreover, the use of this criterion leads to optimise also the traction force distribution and consequently the global traction of the propulsion system is enhanced if the ground is locally homogeneous in terms of its physical properties. The platform orientation is also constrained by the task to achieve which suppose that the platform stay in an horizontal plane ($\mathbf{x}_0$, $\mathbf{y}_0$): scientific measures, vision system...

Since the gauge is constant, for the particular design of this rover, it is clear that in the front view these two conditions, i.e. the platform orientation and the sideways force balance, are equivalent and lead to:

$$\phi = 0 \iff F_{z_1} + F_{z_3} = F_{z_2} + F_{z_4} = \frac{P}{2}, \tag{1}$$

where F_{z_i} is the vertical force at the ith wheel-ground contact and P is the total rover weight.

3.2. Kinematic solution for an optimal configuration

In this section, we make use of these stability conditions to search for an optimal set of configuration parameters through a purely kinematic analysis. The results can be used only for the static reconfiguration of the system, i.e. when contact point are fixed, or for the motion on constant slopes.

Let us consider $\mathbf{b}_i$ the vector joining connection point A_i to the wheel-ground contact point P_i in the sagittal plane in $\mathcal{R}_1$, and $\mathbf{a}_i$ the vector which defines position of each leg connection point A_i with respect to the platform in $\mathcal{R}_1$.

$$\mathbf{a}_i = \begin{bmatrix} x_i & y_i & z_i \end{bmatrix}^t \quad \text{and} \quad \mathbf{b}_i = \begin{bmatrix} X_i & 0 & Z_i \end{bmatrix}^t, \tag{2}$$

Then, for each leg, relative position of the wheel $\mathbf{b}_i$ is expressed as a function of leg parameters, and also the vertical component Z_i^0 which is the projection of $\mathbf{b}_i$ in $\mathcal{R}_0$:

$$\begin{aligned} X_i &= \big(l_1 \cos(\alpha_i) + l_2 \cos(\gamma_i) - R \sin(\psi)\big) \\ Z_i &= -\big(l_1 \sin(\alpha_i) + l_2 \sin(\gamma_i) + R \cos(\psi)\big) \\ Z_i^0 &= -\big(l_1 \sin(\alpha_i + \psi) + l_2 \sin(\gamma_i + \psi)\big) \cos(\phi) + R, \end{aligned} \tag{3}$$

where $\gamma_i = \alpha_i + \beta_i - \frac{\pi}{2}$.

In the sagittal plane, we can define the relative position of the wheels along $\mathbf{x}_1$ axis namely the wheelbase which is denoted for each leg as E_i (where E_i equal E_l or E_r, the left and right wheelbase). Then, force balancing criterion in this plane is verified if:

$$X_i = \frac{E_i}{2} \iff F_{z_i} = \frac{P}{4} \tag{4}$$

The algorithm used to search for solution consists first to compute each Z_i^0 from the measure of (ψ, ϕ, α_i, β_i) and then to determine the optimal set of configuration parameters ($\hat{\alpha}_i$,$\hat{\beta}_i$) by solving the non-linear set of constraints defined below:

$$\begin{array}{l} X_i(\hat{\alpha}_i, \hat{\beta}_i) = E_i/2 \\ Z_{i+1}(\hat{\alpha_{i+1}}, \hat{\beta_{i+1}}) - Z_i(\hat{\alpha}_i, \hat{\beta}_i) = Z_{i+1}^0 - Z_i^0 \\ \sum_i Z_i(\hat{\alpha}_i, \hat{\beta}_i) = 4\, Z_g \end{array} \tag{5}$$

where Z_g is the desired ground clearance.

This kinematic based method allows to compute the optimal set of reconfiguration parameters ($\hat{\alpha}_i$,$\hat{\beta}_i$) to reach a stable configuration from the measure of ϕ and ψ for a given wheelbase and ground clearance values. This algorithm is used to enhance purely static stability.

3.3. Velocity model based control

For a continuous optimisation of the rover stability, we propose a velocity model based control of the system. Let denote $\mathbf{V}_r = \{V_x, V_y, V_z\}$ and $\mathbf{\Omega}_r = \{\Omega_x, \Omega_y, \Omega_z\}$ the screw components which define the relative motion of $\mathcal{R}_1$ with respect to $\mathcal{R}_0$, and $\mathbf{V}_i = \{V_x^i, 0, V_z^i\}$ the velocity of each wheel center with respect to $\mathcal{R}_1$.

Thus, vertical velocity of each point A_i could be expressed as a function of linear velocity $\mathbf{V}_r$ and angular velocity $\mathbf{\Omega}_r$ of the rover platform:

$$V_{z_i} \quad = \quad \Omega_x\, y_i - \Omega_y\, x_i + V_z\,, \tag{6}$$

and the horizontal velocity component is controlled in such way to reach a constant wheelbase E_i through a proportional feedback:

$$V_{x_i} \quad = \quad -K_{v_x}\,(X_i - \frac{E_i}{2})\,, \tag{7}$$

where K_{v_x} is a constant gain.

The aim of the attitude control algorithm is to force the platform orientation to be horizontal. This control could be achieved through, first a proportional feedback from the measure of pitch and roll angles to the control of rover angular velocity:

$$\mathbf{\Omega}_r = \left[\begin{array}{l} \Omega_x = -K_\psi\, \psi \\ \Omega_y = -K_\phi\, \phi \\ \Omega_z = 0 \end{array} \right]_{\mathcal{R}_1}, \tag{8}$$

and secondly, a feedback function from the ground clearance Z_g to the rover linear velocity:

$$\mathbf{V}_r = \left[\begin{array}{l} V_x = 0 \\ V_y = 0 \\ V_z = -K_{v_z}\,(Z_g - Z_g^d) \end{array} \right]_{\mathcal{R}_1}, \tag{9}$$

where the rover ground clearance value is defined as $Z_g = \frac{1}{4}\sum_i(Z_i)$ and computed from measure of (α_i, β_i) with the equation 3. K_{v_z}, K_ϕ and K_ψ are constant gains.

The velocity of each wheel center can be expressed as a function of (α_i, β_i, $\dot{\alpha}_i$, $\dot{\beta}_i$) in the rover sagittal plane ($\mathbf{x}_1$, $\mathbf{z}_1$). Since the velocity of each point A_i in $\mathcal{R}_1$ is related to the velocity of the wheel center, we can write:

$$\left(\begin{array}{c} V_{x_i} \\ V_{z_i} \end{array} \right) = \mathbf{J}_i(\alpha_i,\, \beta_i) \left(\begin{array}{c} \dot{\alpha}_i \\ \dot{\beta}_i \end{array} \right) \quad \text{and} \quad \mathbf{J}_i(\alpha_i,\, \beta_i) = \left[\begin{array}{cc} l_1\, \sin(\alpha_i) & l_2\, \sin(\gamma_i) \\ l_1\, \cos(\alpha_i) & l_2\, \cos(\gamma_i) \end{array} \right] \tag{10}$$

Then, by setting desired wheelbase E_i and ground clearance Z_g^d from an high level planning algorithm, each leg are controlled. The aim is to minimize Z_g^d and maximize E_i under geometrical rover-ground collision constraint:

$$\left(\begin{array}{c} V_{x_i} \\ V_{z_i} \end{array} \right) = \mathbf{F}_i\,(E_i,\, Z_g) \;\text{ and }\; \left(\begin{array}{c} \dot{\alpha}_i \\ \dot{\beta}_i \end{array} \right) = \mathbf{J}_i^{-1} \left(\begin{array}{c} V_{x_i} \\ V_{z_i} \end{array} \right) \tag{11}$$

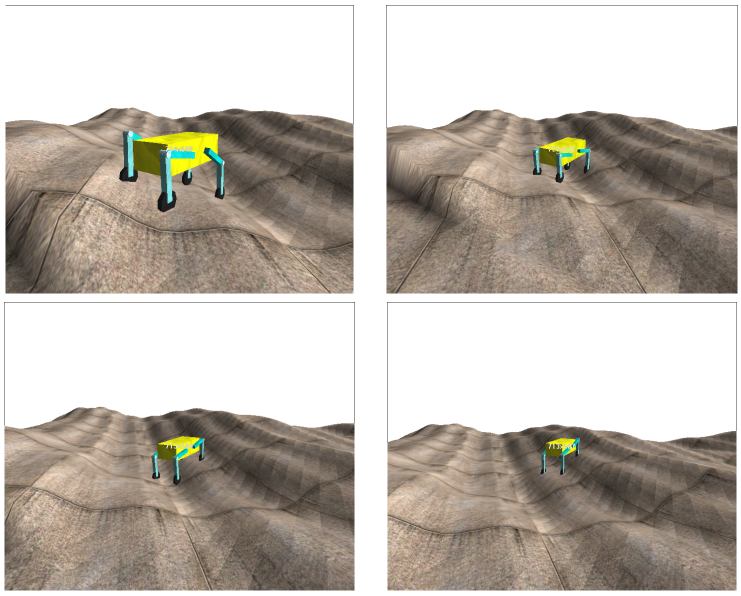

Figure 3: Illustrations of the motion simulation with attitude control.

3.4. Evaluation of the stability margin

In order to qualify the proposed rover stability control algorithm, a technique that quantify a measure of the stability is necessary. Definition of stability metrics for mobile robots evolving on uneven surface has been investigated by previous authors. This is a recurrent problem specially in the case of legged robots or mobile manipulators[7, 8].

In section 3.2, we had considered the distance between c.o.g and geometric center of wheel-ground contact as a criterion for a combined optimisation of the rover stability and the global traction. Instead, for a pure stability evaluation that is independent of the traction, we consider a more sophisticated metric. So, a stability margin metric that takes rover altitude into account is needed because of the high unevenness of considered terrains. In our evaluation, the stability margin defined by Papadopoulos[6] is used.

This technique can be summarized as follow: the line joining each consecutive terrain-contact point P_i define a tipover axis. The vector $\mathbf{l}_i$ joining the rover c.o.g. G to the center of each tipover axis is computed. Then angles θ_i between each $\mathbf{l}_i$ and the gravitational force vector $\mathbf{f}_g$ are computed as the stability angle over each tipover axis. The overall rover stability margin is defined as the minimum of all the stability angles: $m_s = \min\{\theta_i, i = 1..n\}$.

This is a general metric technique for the n-contact points problem, and it is possible to simplify this algorithm in our case. As it was supposed in a previous paragraph that legs are controlled to constrain the terrain-contact of each wheel, the number of contact points is constant and equals to four.

3.5. Implementation and simulation results

In the aim to evaluate the locomotion performances of planetary rover, we have developed a simulator[9, 10] that takes into account the dynamics of mobile robot and the soil dynamic behaviour where soft soils are considered. Interaction models between rover wheels and soils are also integrated. This simulator allows to evaluate the dynamic behaviour of mobile robot evolving on rigid surface or soft soil like sand. Geophysical properties of the ground are experimentally defined by a triaxial test performed on a sample of soil. The definition of the ground geometry is based on frequency synthesis that allows to generate realistic artificial terrain[11]. By observing natural forms, it was established that landscape forms have an A/f^p frequency spectra where A defines the roughness and p relates to the fractal dimension. So, by using the spatial inverse Fourier transform of this

spectral signal, an altitudes map of considered terrain is computed. The figure 3 gives illustations of the motion simulation with attitude control.

These simulations present same initial conditions in terms of soil properties and rover state. Horizontal displacements of the rover are defined through a velocity control, the ground velocity is 8 cm/sec. The two simulations differ only by the use or not of the velocity based attitude control. In each case, evaluation of stability margin is performed by using the technique previously presented which integrates the inertial forces[6].

Simulation results are shown in the figure 4. The mean stability of the system performing attitude control is 21% greater than with a fixed configuration of rover. The minimum stability value in the case where attitude control is used, is 22° where as it is 14° in the other case. This represents an enhancement of the minimum stability margin of 54%.

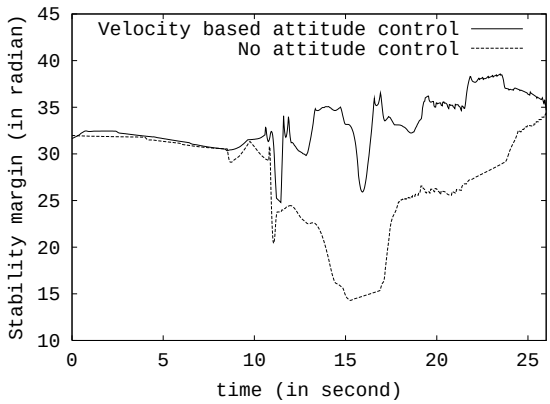

Figure 4: Evolution of the stability margin during a locomotion task simulation, with and without attitude control.

4. TRACTION CONTROL

Traction control deals with the optimisation of the wheel torque which is directly related to the tractive force (thrust). This problem is very important for autonomous robots and particularly for planetary application where the energy criterion is fundamental. The longitudinal wheel slippage ratio is defined as the relative difference between the ideal rolling velocity and the real velocity of the wheel center $s = (rw - v)/(rw)$. This slippage is necessary for developing a force traction and particularly on soft soils[12]. The force traction depends also on soil parameters, normal force, contact geometry, wheel stiffness, crampon geometry... In the case of our mini-rover, the characterization of the interaction can be done in situ by locking 3 wheelegs and proceeding to a shearing (and/or a compression) tests of the local soil by acting on the fourth wheeleg. This tests need the measure of the normal and tangential contact force and the slippage ratio which can be computed from the joint velocities of the actuated wheeleg. This test is similarly done by using a Scara manipulator and an actuated wheel with a 6 axis force sensor (figure 5a).

Figure 5b represents experimentally measured tangential force coefficient commonly called the drawbar pull coefficient which is equal to the difference between the tractive force (thrust) and the rolling resistance divided by the vertical load. The rolling resistance is mainly due to soil compaction and wheel sinkage. The curve corresponding to zero slippage ($s = 0$) represents the rolling resistance since the tractive force is theoretically null when there is ideally rolling. The drawbar pull coefficient is given on figure 6a as a function of the slippage for different vertical loads. The obtained curves could be then represented by analytical relations (similarly to Bekker's relations for rigid wheels) characterising the global wheel-ground interaction. The gaps between the 3 curves represent the rolling resistance which increases more quickly than the tractive force when the normal load increases because the sinkage increases more quickly than the contact area.

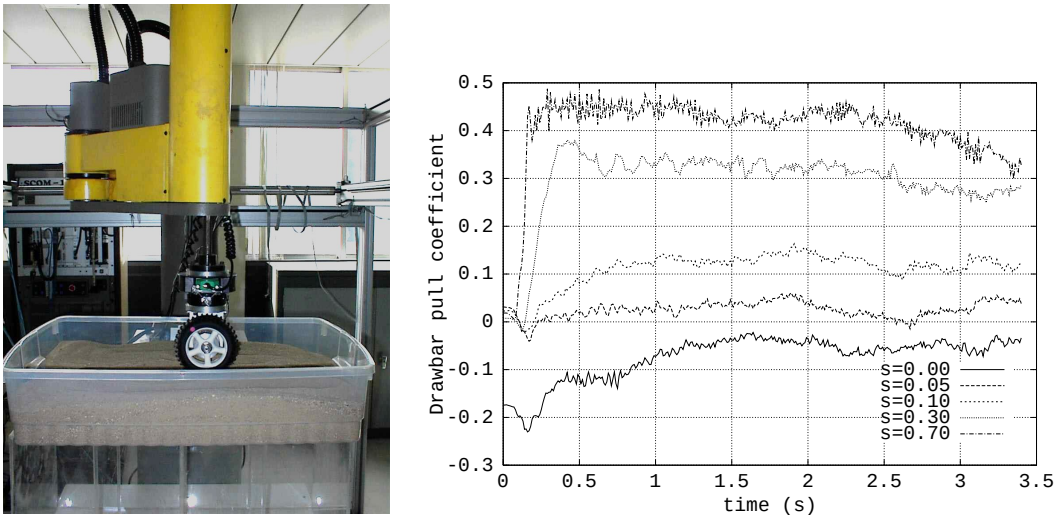

(a) (b)

Figure 5. (a) Testbed of wheel-sand interaction with a Scara manipulator, (b) tangential force coefficient of wheel-ground contact for a constant normal force $Fz = 30N$ and for different slippage ratio.

Tractive efficiency, which is defined as the ratio of the drawbar power to the power transmitted to the wheel, is an indication of how efficiently the vehicle displacements are produced. Wong[13] defines this measure as (drawbar pull/thrust) × (1-slip). We use another index efficiency defined as (Drawbar pull coefficient) × (1-slip) which characterizes the power of the tractive force (drawbar pull) for a relative displacement ratio (1-slip). Variations in the tractive efficiency with slippage ratio and for different normal forces are shown in figure 6b. The tractive efficiency increases in general from zero where the wheel is self-propelled, then reaches a maximum at an optimal slip value and finally drops to zero when slip equals 1 (where the wheel spins without advancing). It can be seen from figure 6b that the optimal slippage increases with the vertical load for the same reasons which are explained previously for the drawbar pull.

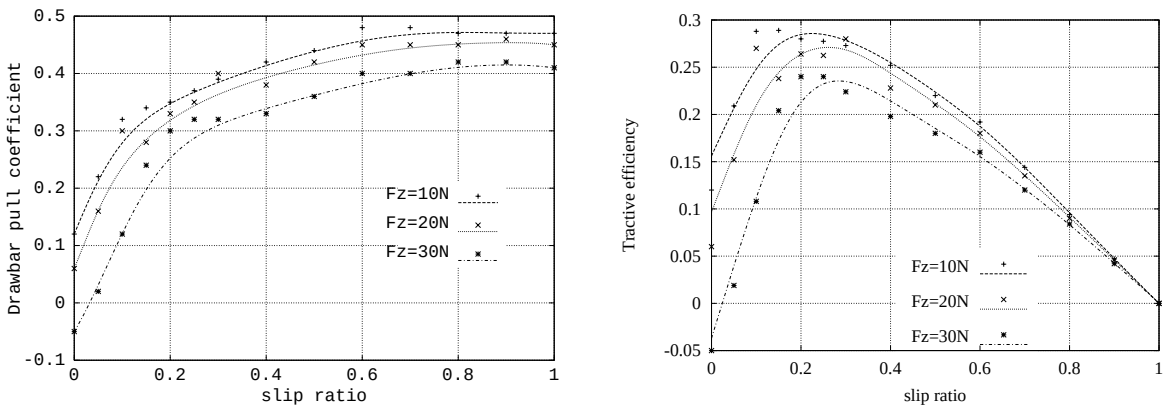

(a) (b)

Figure 6. (a) Drawbar pull as function of the slippage ratio for different values of vertical loads, (b) traction efficiency as function of the slippage ratio.

By determining the optimal slippage from the tractive efficiency curve, we can easily use the drawbar pull curve (figure 6) for determination of the optimal wheel torque (wheel radius × thrust) which is given directly

by the actuator current. This method has the advantages to be simple to implement and to be based on few sensors and some preliminary in situ tests of wheel-soil interaction. This method assumes that the mechanical properties of the wheel-ground properties are constant per area and must be completed to integrate rules for detecting soil properties changes.

5. CONCLUSION

An original velocity based algorithm that improved both the global traction and the stability performances of a reconfigurable rover has been presented. This method is simple to implement and needs only few sensors which are: inclinometers for the pitch and the roll measurements and position sensors for the leg mechanism. This algorithm has been validated through simulations. A method used to determine the optimal wheel traction torque has also been developed by considering the geophysical ground properties. The capability to perform this estimation in-situ with the mini-rover by using its redundantly actuated mobilities is exploited to determine an optimal traction torque.

REFERENCES

1. A. Kemurdjian, "Planet rover as an object of the engineering design work," in *Proceedings ICRA's of the International Conference on Robotics and Automation*, pp. 140–145, (Belgium), 1998.
2. A.Halme, I.Leppänen, S.Salmi, and S.Ylönen, "Hybrid locomotion of a wheel-legged machine," in *Proceeding CLAWAR's of the International Conference on Climbing and Walking Machine*, (Madrid), 2000.
3. K.Iagnemma, A.Rzepniewskia, S.Dubowsky, P.Pirjanianb, T.Huntsbergerb, and P.Schenker, "Mobile robot kinematic reconfigurability for rough-terrain," in *Proceedings SPIE's International Symposium on Intelligent Systems and Advanced Manufacturing*, August 2000.
4. F.BenAmar, V.Budanov, Ph.Bidaud, F.Plumet, and G.Andade, "A high mobility redundantly actuated mini-rover for self adaptation to terrain characteristics," in *Proceedings CLAWAR's, 3th International Conference on Climbing and Walking Robots*, pp. 105–112, 2000.
5. G.Andrade, F.BenAmar, Ph.Bidaud, and R.Chatila, "Modeling wheel-sand interaction for optimization of a rolling-peristaltic motion of a marsokhod robot," in *Proceedings IROS's International Conference on Intelligent Robots and Systems*, pp. 576–581, 1998.
6. E. Papadopoulos and D. Rey, "A new mesure of tipover stability for mobile manipulators," in *Proceedings ICRA's of the International Conference on Robotics and Automation*, pp. 3111–3116, 1996.
7. A.Ghasempoor and N.Sepehri, "A measures of machine stability for moving base manipulators," in *Proceedings ICRA's of the International Conference on Robotics and Automation*, pp. 2249–2254, 1995.
8. S. Sugano, Q. Huang, and I. Kato, "Stability criteria in controlling mobile robotic systems," in *Proceedings ICRA's of the International Conference on Robotics and Automation*, pp. 832–838, 1993.
9. C. Grand, F. B. Amar, P. Bidaud, and G. Andrade, "A simulation system for behaviour evaluation of off-rooad mobile robots," in *Proceedings CLAWAR's of the International Conference on Climbing and Walking Robots*, pp. 307–314, (Germany), 2001.
10. G. A. Barroso, *Modélisation et Adaptation du Mouvement de Robot Tout-Terrain.* PhD thesis, Université de Paris VI, 2000.
11. B.Mandelbrot, *The fractal geometry of nature*, W.H. Freeman, 1982.
12. M. Bekker, *Introduction to terrain-vehicle systems*, The University of Michigan Press, 1969.
13. J. Wong, *Terramechanics and off-road Vehicles*, Elsevier, 1989.